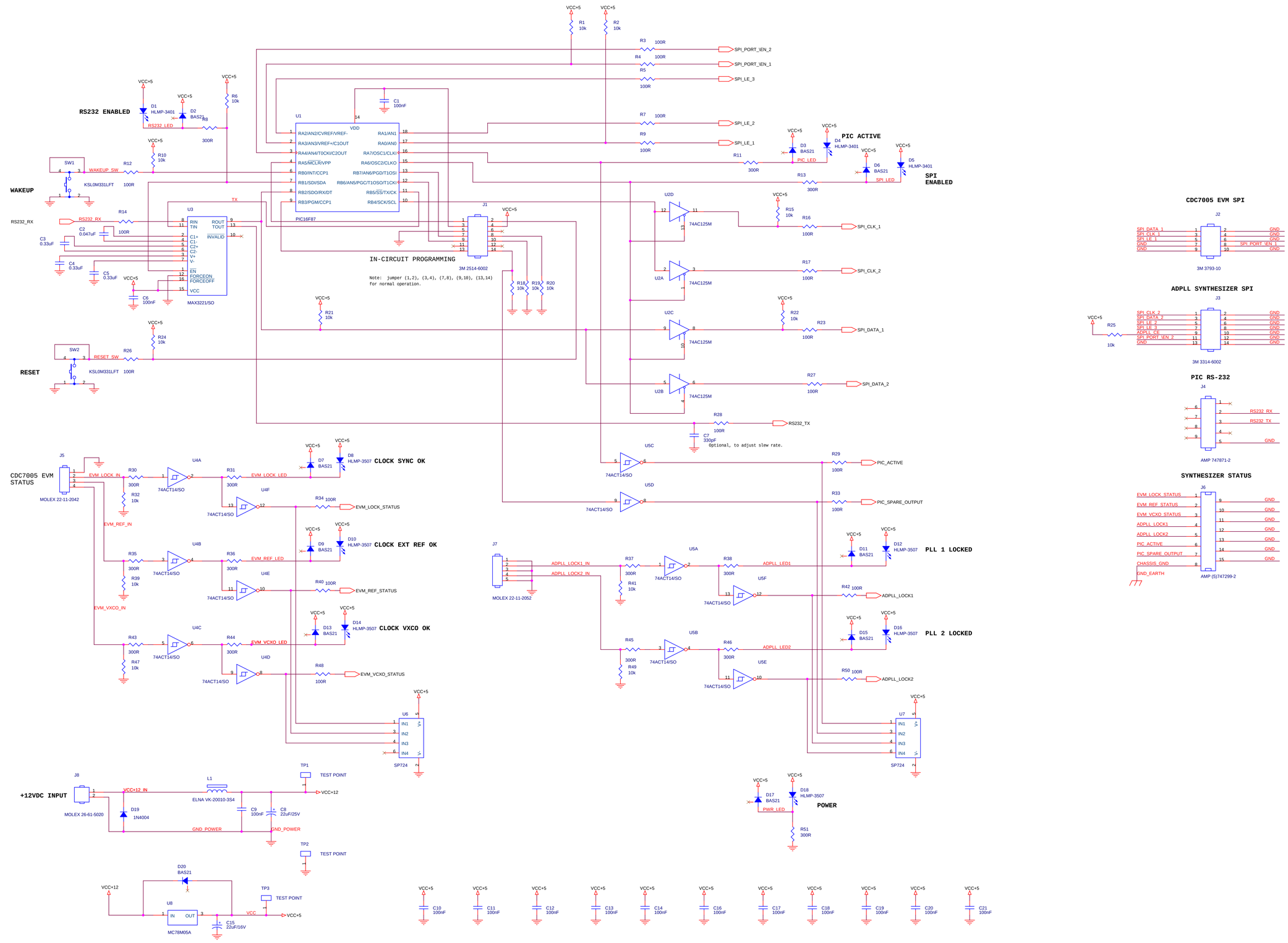

Title	FREQUENCY SYNTHESIZER CONTROLLER
Size D	Document Number 6045-204
Rev 0	
Date: Friday, September 15, 2006	Sheet 1 of 1